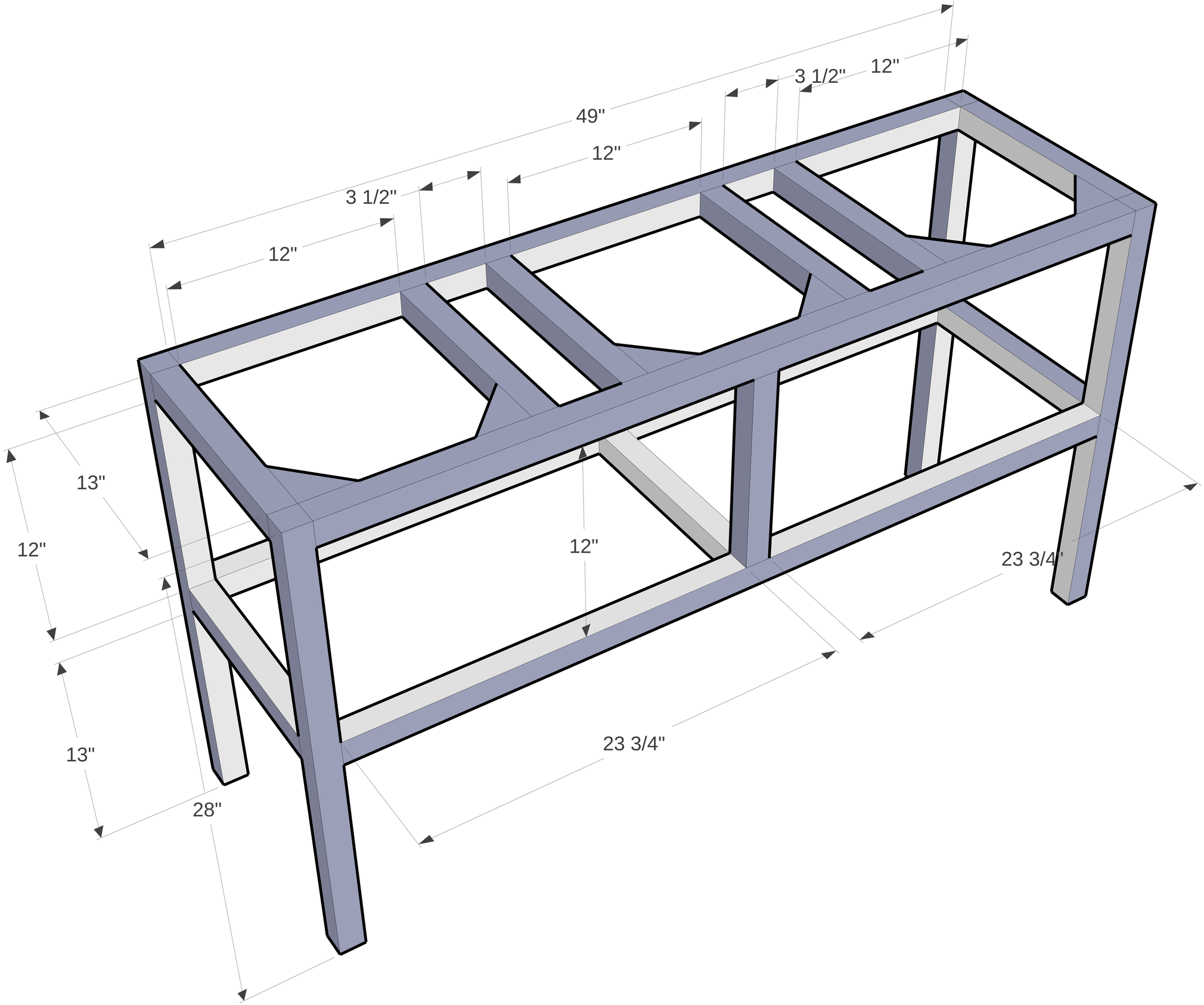
49"
12"
3 1/2"
12"
3 1/2"
12"
13"
12"
12"
23 3/4"
13"
23 3/4"
28"